5013

Print position	Printing size (mm)	Printing code	Handlingcode
1. FRONT	50 mm x 35 mm	TSB	HKE
2. BACK	70 mm x 35 mm	TSB	HKE
3. FRONT	50 mm x 35 mm	TR50	HKE

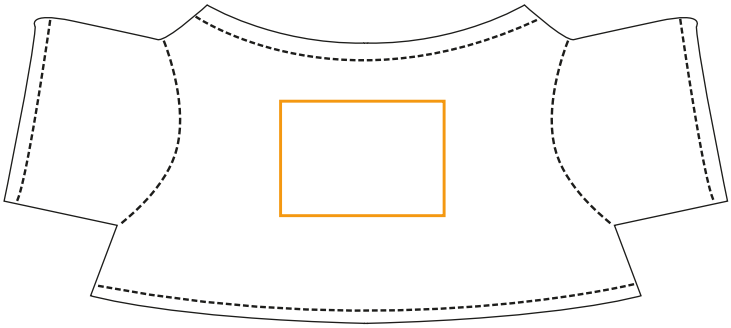

1 + 3. FRONT

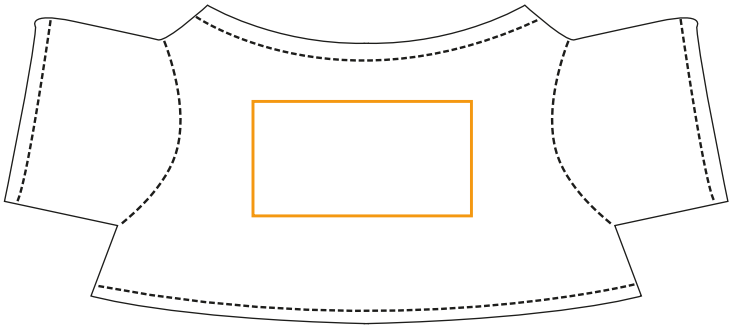

2. BACK